SPECIFICATION APPLIED

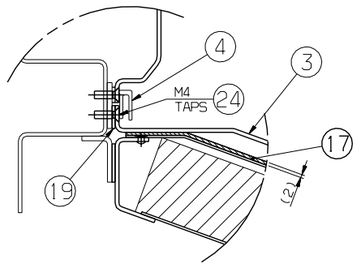

DETAIL K
SCALE=1/2

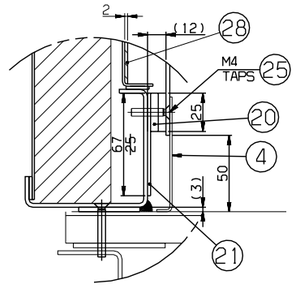

DETAIL L
SCALE=1/2

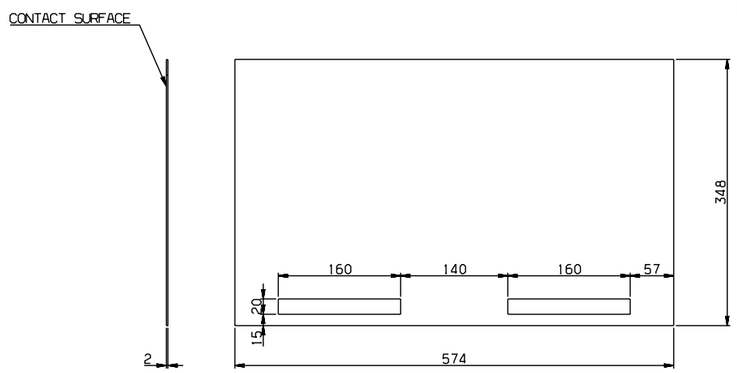

DETAIL #16
SCALE=1/4

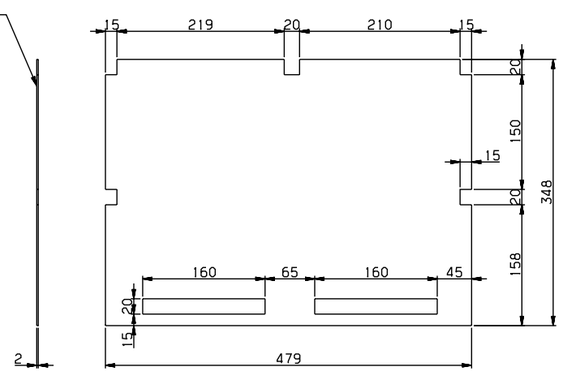

DETAIL #28
SCALE=1/4

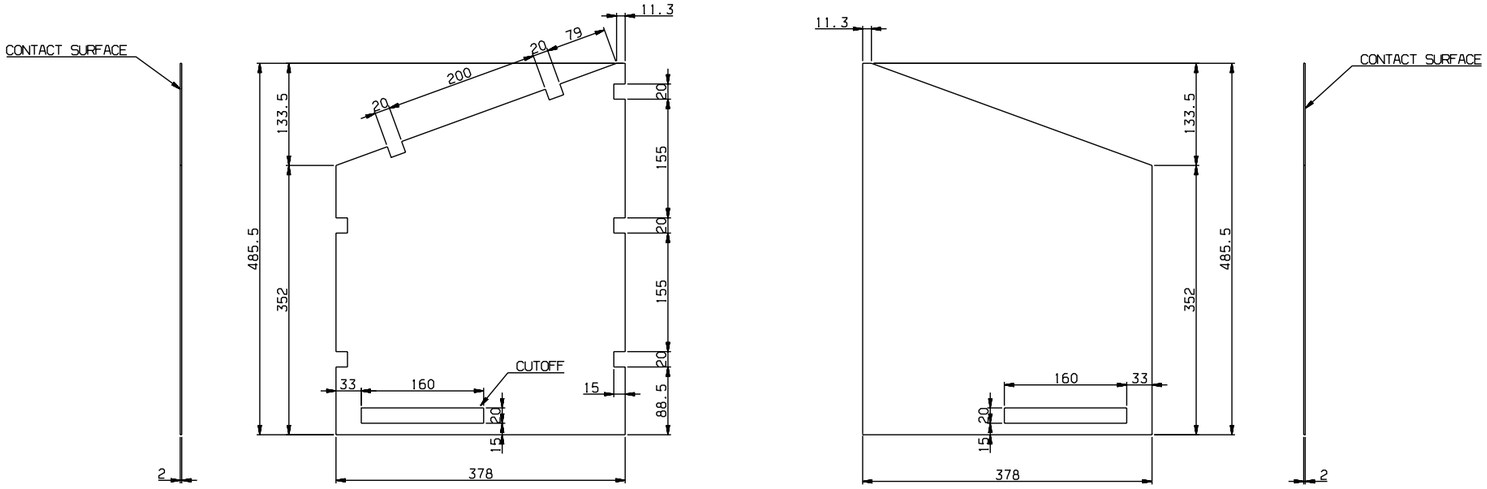

DETAIL #26
SCALE=1/4

DETAIL #27
SCALE=1/4

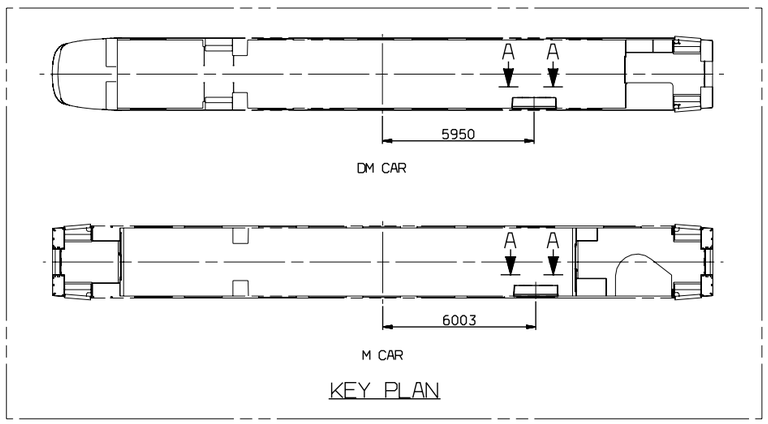

KEY PLAN

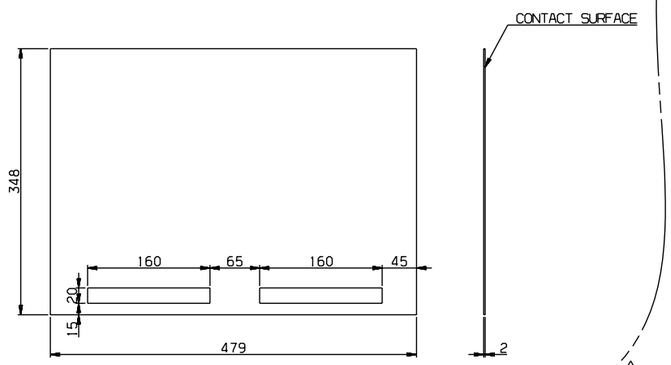

DETAIL #29
SCALE=1/4

NOTE

1. RFP51311EJ0 #34~35, #37~#39, #41 SHOULD BE MOUNTED WITH RIVET AND SEALANT(#22).
2. RFP51311EJ0 #36, #41 SHOULD BE SEALED WITH PART 22 AFTER MOUNTING.
3. PART 5, 8, 10, 24, 25 SHOULD BE APPLIED WITH PART ~~23~~, 30. (A)
4. (A) PART #13~16, 19, 20 SHOULD BE APPLIED WITH DOUBLE ADHESIVE TAPE.

	NO.	PART NO.	DESCRIPTION	MATERIAL	Q'TY		REMARKS
(A)	30	CP910004-406	ADHESIVE	EPDM	1		LOCTITE 242
(A)	29	RFP51301EJ0-029	PACKING	EPDM	1		T2 MODEL:CELLO EVA 6-01 SK
(A)	28	RFP51301EJ0-028	PACKING	EPDM	1		T2 MODEL:CELLO EVA 6-01 SK
(A)	27	RFP51301EJ0-027	PACKING	EPDM	1		T2 MODEL:CELLO EVA 6-01 SK
(A)	26	RFP51301EJ0-026	PACKING	EPDM	1		T2 MODEL:CELLO EVA 6-01 SK
	25	RS60607-101S	SCREW,F.H.	SUS304	10		M4X25
	24	RS60607-099S	SCREW,F.H.	SUS304	18		M4X16
(A)	~~23~~	~~CP920138-400~~	~~ADHESIVE,LOCTITE 243~~	~~ASSY~~	~~1~~		~~LOCTITE 243~~
	22	CP910003-445	SEALANT	POLYURETHANE	1		SIKAFLEX_221,GRAY
(A)	21	RFP51301EJ0-021A	PACKING	EPDM CR	1		T2X67X2500 MODEL:CELLO EVA 6-01 SK
	20	RFP51301EJ0-020	PACKING	CR	2		T5X25X2500 MS39000-004(SC70-F2(CR))
	19	RFP51301EJ0-019	PACKING	CR	1		T2X15X2600 MS39000-004(SC70-F2(CR))
(A)	18	RFP51301EJ0-018A	PACKING	EPDM CR	1		T2X28X1630 MODEL:CELLO EVA 6-01 SK
(A)	17	RFP51301EJ0-017A	PACKING	EPDM ~~CR~~	1 ~~7~~		T2x378x1630 MODEL:CELLO EVA 6-01 SK
(A)	16	RFP51301EJ0-016A	PACKING	EPDM ~~CR~~	1		T2 MODEL:CELLO EVA 6-01 SK
	15	RFP51301EJ0-015	PACKING	CR	1		T2x15x1700 MS39000-004(SC70-F2(CR))
	14	RFP51301EJ0-014	PACKING	CR	1		T3x40x2500 MS39000-004(SC70-F2(CR))
	13	RFP51301EJ0-013	PACKING	CR	1		T2x25x2800 MS39000-004(SC70-F2(CR))
	12	RS60801-004S	WASHER,SPRING	SUS304	18		M4
	11	RS60807-007S	WASHER,PLAIN	SUS304	18		M4
	10	RS60114-023S	BOLT,HEX.,HEAD	SUS304	18		M4X12
	9	RS60919-063S	RIVET,BLIND,CSK HEAD	SUS304	50		M4X8
	8	RS60607-103S	SCREW,F.H.	SUS304	9		M4X35
	7	RS60801-006S	WASHER,SPRING	SUS304	12		M6
	6	RS60809-001S	WASHER,PLAIN	SUS304	12		M6
	5	RS60114-063S	BOLT,HEX.,HEAD	SUS304	12		M6X20
	4	RFP56101EJ0	MOLDING,FITTING	ASSY	1		
	3	RFP51321EJ0	COVER,ENGINE FILTER	ASSY	1		
	2	RFP51311EJ0	FRAME,ENGINE FILTER	ASSY	1		
	1	RFP40101EJ0	INSULATION,ENGINE FILTER	ASSY	1		

승인 APP	검도 CHK	설계 DGN	제도 DRG
JeongYul Lee 2014.10.27	KeongBong Park 2014.10.27	HeonUk Lee 2014.10.27	HeeSook Jeong 2014.10.27

재질 MAT'L ASSY
중량중 G.W
일반공차 MC MD CT: B B B
SIZE A1

TITLE 품명 COVER,ENGINE FILTER, FITTING (2/2)
도면 번호 DRG. NO MS RFP51301EJ0 Ver. 00 Rev. -A
SCALE 1/8 매수 SHEET 2 of 2

RSD1402 RFP- 난-PRJT 설리분출 CATIA

HYUNDAI Rotem 현대로템주식회사

기호 MARK	일자 DATE	변경 내역 DETAIL OF REVISION(E.C ZONE)	설변번호 E.C NO.	설계 DGN	검도 CHK	승인 APP
Ax14	2014.12.18	ADDED PART NO. #26~30, DELETED PART NO. #23 CHANGED MATERIAL(#16,17,18,19)	RSD1402-U071	H.U.LEE	K.B.PARK	J.Y.LEE

일반 GENERAL	~ 40	2	4
	~ 30	2	3
	~ 10	1	1.5
	< 1	0.5	1
치수 구분 DIVISION	~3150	-	7
	~1600	4	5
	~ 800	3	4
	~ 400	2	3
	~ 200	1.5	2
	~ 100	1	1.5
등급 GRADE		A	B
주조 CASTING			
~20M		8	14	24
~15M		7	12	21
~12M		6	10	18
~ 8M		5	8	14
~ 4M		4	6	11
~ 2M		3	4	8
~ 1M		2	3	6
~ 315		1	2	4
~ 120		1	2	3
~ 30		1	1	1
등급 GRADE		A	B	C
일반 기계 MOLDING				
~ 20M	-	6.0	8.0
~ 15M	-	5.0	7.0
~ 12M	-	4.0	6.0
~ 8M	-	3.0	5.0
~ 4M	0.8	2.0	4.0
~ 2M	0.5	1.2	3.0
~ 1M	0.3	0.8	2.0
~ 315	0.2	0.5	1.2
~ 120	0.15	0.3	0.8
~ 30	0.1	0.2	0.5
3~6	0.05	0.1	0.2
등급 GRADE		A	B	C
기계 가공품 MACHINING				
일반공차 GENERAL TOLERANCE				

본 도면은 당사 재산권이며 무단복제, 배포금지. PROPERTY OF ISSUING ENTITY, CANNOT BE DISTRIBUTED OR REPRODUCED WITHOUT AUTHORIZATION.